Richard VA3NDO has built an alternative X sweep generator using a 555 IC, and a 741 op-amp to invert the ramp. This is suitable for driving some oscilloscopes such as the HP1741A Richard uses, which have an inverted X drive (compared to my original 'scope).

Richard writes:

"I have built and bench tested an X sweep inverter to drive my oscilloscope correctly. I will have a switch on the rear of my unit to select " Normal X Sweep" or " Inverted X sweep". The X sweep inverter was built with a 741 op amp in " inverting amp configuration". The op amp was supplied with +12 and -12 volts utilizing a 555 'power supply'."

The circuit diagran was designed with EAGLE CAD software:

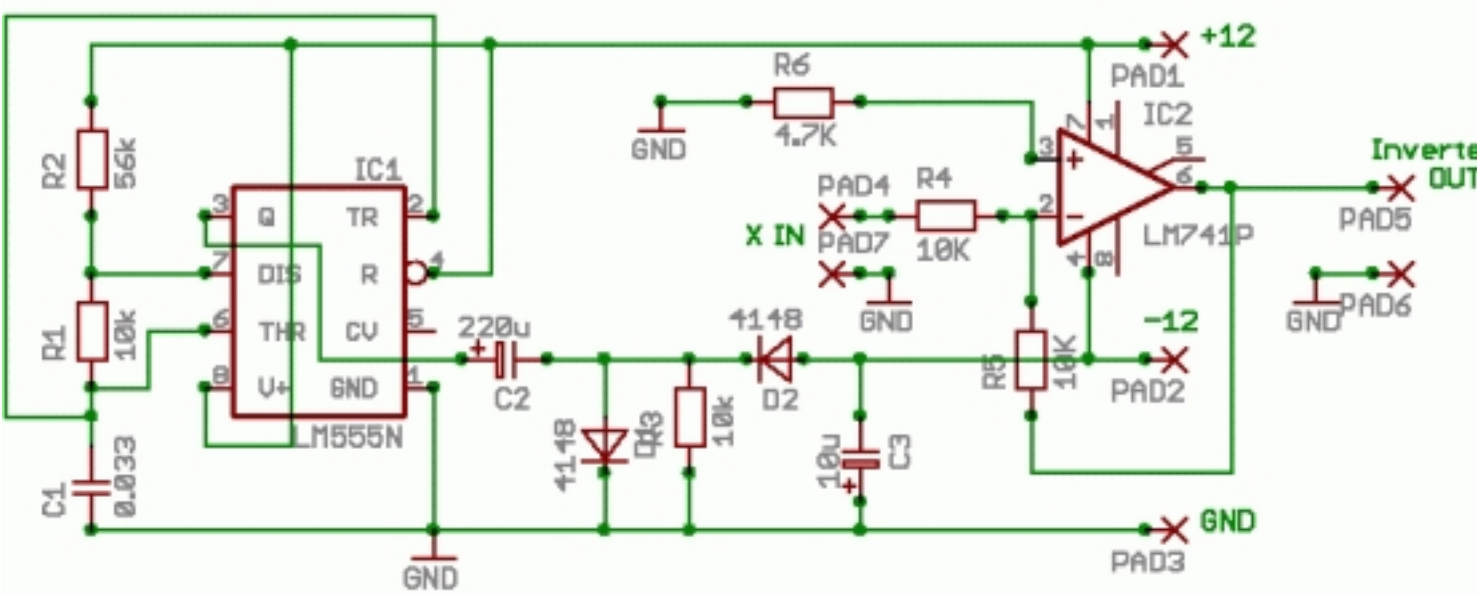

This photo shows the normal and inverted X sweep waveforms:

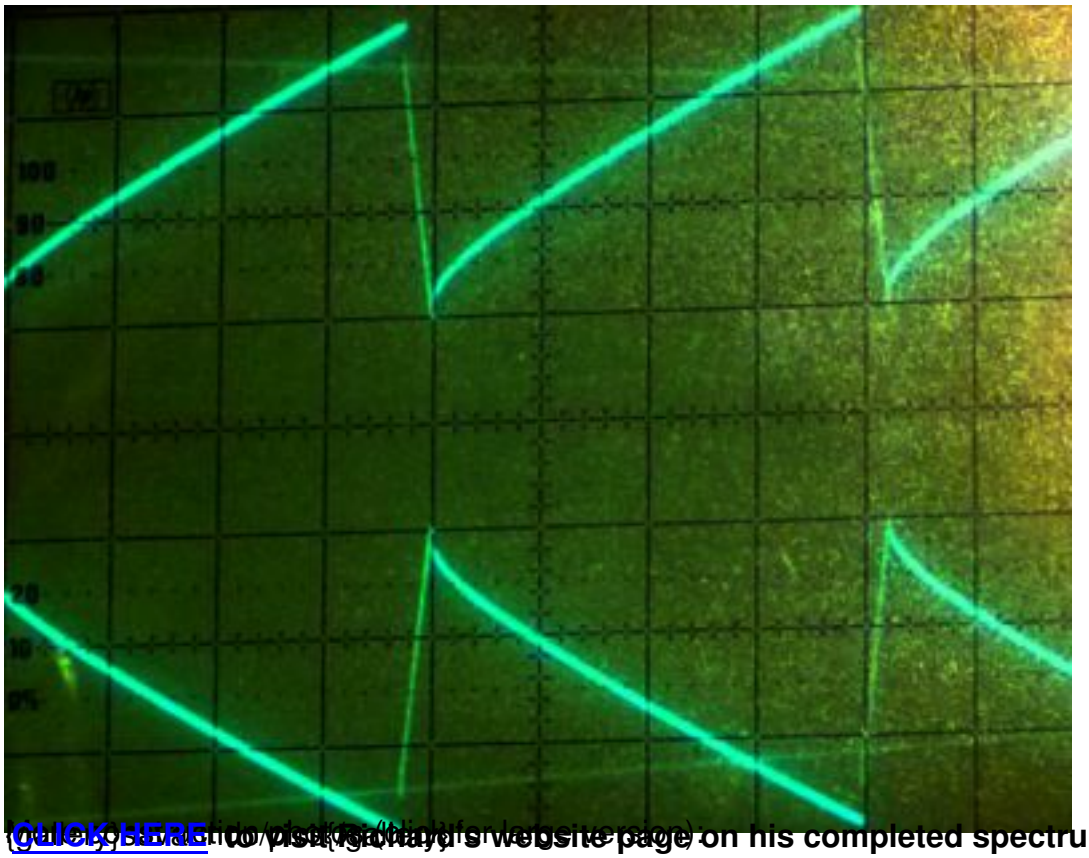

[CLICK HERE](#) to visit Hans's website page on his completed spectrum analyser.