I have three of these, serial numbers 600, 1800 and 3044, all packed in original cartons.

Photos:

{gallery}trochotron/photos{/gallery}

Information:

VS10G datasheet: http://www.mif.pg.gda.pl/homepages/frank/sheets/022/v/VS10G.pdf

Nice article: http://www.ase-museoedelpro.org/Museo_Edelpro/Catalogo/Overview/The%20Trochotron.pdf

Book chapters: http://www.die-wuestens.de/rd/TROCH.pdf

Circuit diagram from VS10G datasheet

100kc/s counter module from FS-1/4 test rig for VS10G?

Possible test rig for VS10G?

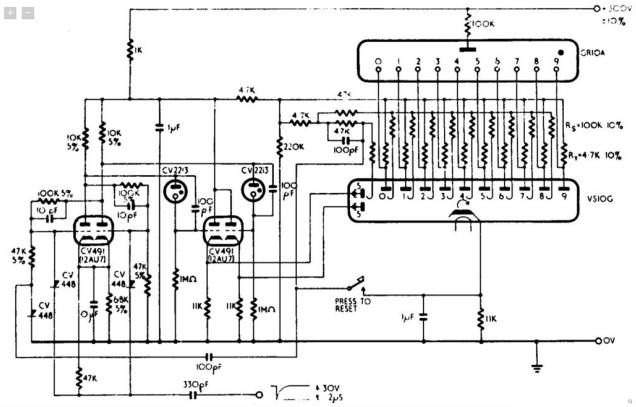

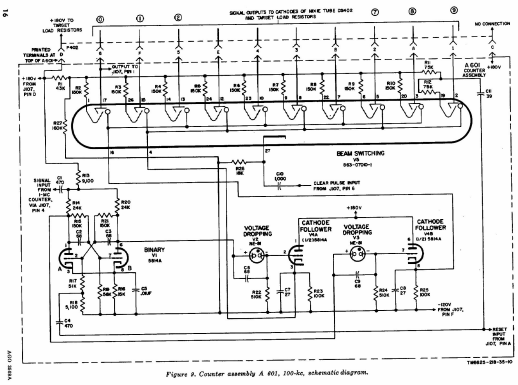

Figure 9. Counter assembly A 601, 100-kc, schematic diagram.

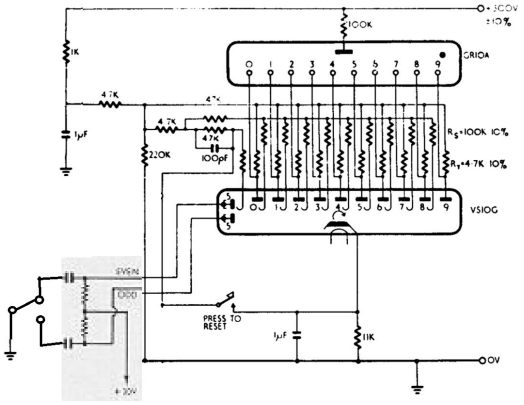
+300V
±10%
100K
1K
GR10A
0 1 2 3 4 5 6 7 8 9
4.7K
4.7K
4.7K
4.7K
100pF
1μF
220K
R5=100K 10%
R4=4.7K 10%
VS10G
SVSIN
PRESS TO
RESET
1μF
11K
0V